Contents

CF Flange Series	Page
Specifications	36
Features	36
Technical Data	37
Copper Gasket	38
Plate Nut	38
Cap	39
Blank- Nonrotatable	40
Blank-Nonrotatable-Tapped Bolt Holes	40
Blank- Rotatable	41
Blank-Rotatable-Tapped Bolt Holes	41
Bored Flange - Nonrotatable	42
Bored Blank (CF16)-Nonrotatable	43
Bored Flange -Rotatable	44
Bored Flange -Rotatable-Tapped Bolt-Holes	45
Bored Blank-Neck (CF16) - Nonrotatable	46
Bored Blank-Neck (CF16) - Nonrotatable-Tapped Bolt Holes	46
Bored Blank-Neck (CR16)- Rotatable	47
Bored Blank-Neck (CR16)- Rotatable-Tapped Bolt Holes	47
Half Nipple - Nonrotatable	48
Half Nipple - Rotatable	48
CF Nipples - Fixed	49
CF Nipples- 1 Flange Rotatable	49
CF90° Elbows-Fixed	50
CF90°Elbow-Rotatable	50
CF Tees - Fixed	51
CF Tees - 2 Flanges Rotatable	51
CF 4 Way Crosses - Fixed	52
CF 4 Way Crosses 2 - Falnges Rotatable	52
CF Flexible Hoses - 1 Flange Rotatable	53
CF Compressible Bellows Connections - 1 Flange Rotatable	54
CF x CF Reducing Flange	55
CF x CF Reducing Adaptor-Fixed	56
CF x CF Reducing Adaptor-Small Flange Rotatable	56
CF x ISO Tubulated Adaptor	57
CF x KF Tubulated Adaptor	57

SHANTENG VACUUM

CF 法兰 系列

基本信息

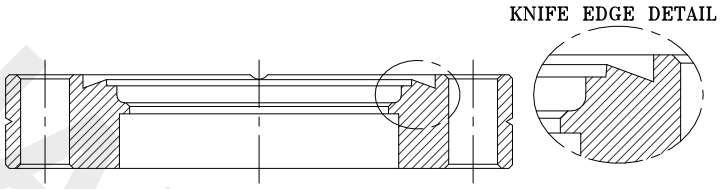

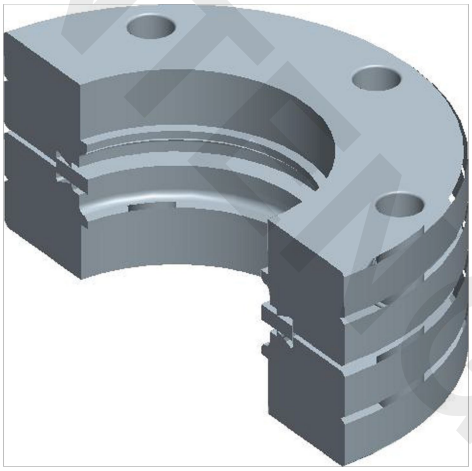

Features

The high sealing effect and the low leak rates performance of CF flange connections is a result of gasket material. When
assembling the CF flange connect, the knife edge is pressed into the flat copper gasket and force the seal material both axially
as well as radially outwards to the flange. The material is enclosed and cannot flow even at high bakeout temperature. Due to
this deformation of the seal such connections may sometimes stick together. They can be easily separated with a special tool or screwdriver.

CF Offered in both rotatable and nonrotatable versions with through holes and tapped bolt holes. Metric tapped holes and untapped holes flanges are identical products. UNC or UNF or other tapped holes can be ordered as specials.

SHANTENG VACUUM

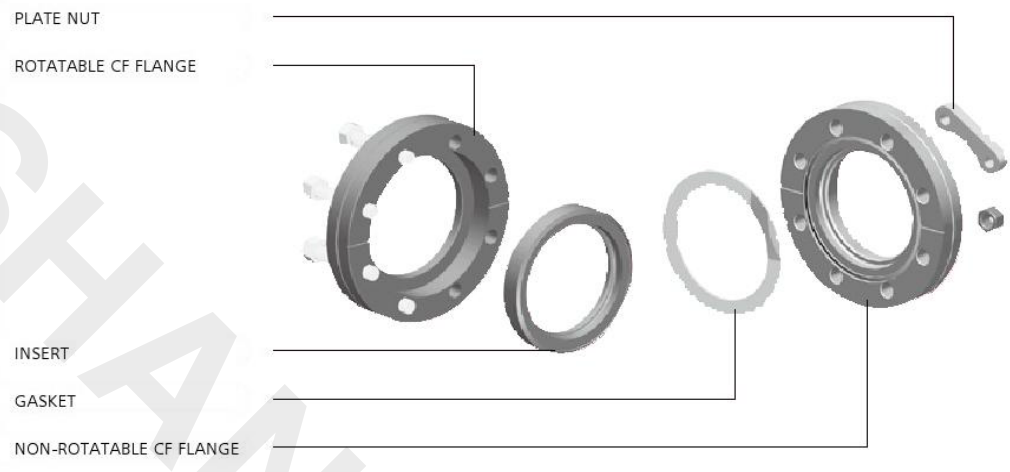

Specifications

Blank & Flange	304 S.S.
Gaskets	OFHC Copper or Viton
Bolt	304 S.S.
Temp. Range	-200°C ~ 450°C (OFHC 铜)
Vacuum Range	10^{-13} Torr
Torque Rating	CF35 and smaller 220 kgf-cm CF63 and larger 360 kgf-cm

SHANTENG VACUUM

Technical Data

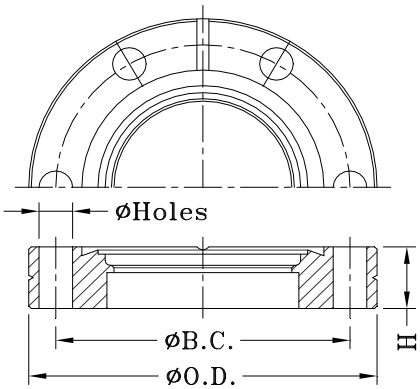

	CF	16 (133)	35 (275)	63 (450)	100 (600)	150 (800)	200 (1000)	250 (1325)
Outside diameter O.D.	inch	1.33	2.74	4.47	5.97	7.97	9.97	13.25
	mm	33.80	69.50	113.60	151.60	202.50	253.20	336.60
Bolt circle diameter B.C.	inch	1.06	2.31	3.63	5.13	7.13	9.13	12.07
	mm	26.90	58.70	92.10	130.30	181.00	231.80	306.50
Height H	inch	0.30	0.50	0.71	0.79	0.87	0.97	1.12
	mm	7.50	12.70	18.00	20.00	22.00	24.70	28.50
Hole Diameter	inch	0.17	0.26	0.33	0.33	0.33	0.33	0.33
	mm	4.30	6.70	8.40	8.40	8.40	8.40	8.40
Number of holes		6	6	8	16	20	24	30

SHANTI HIGH VACUUM

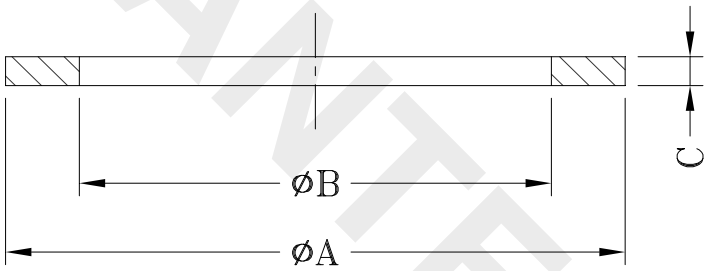

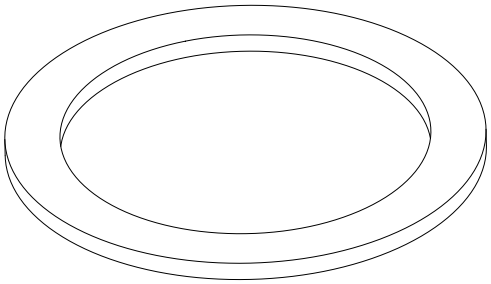

Copper Gasket

Size	Model No.	PKG QTY	A in	A mm	B in	B mm	C in	C mm
CF 16 (133)	CF16CG	10	0.83	21	0.63	16	0.08	2.00
CF 35 (275)	CF35CG	10	1.89	48	1.46	37	0.08	2.00
CF 63 (450)	CF63CG	10	3.23	82	2.48	63	0.08	2.00
CF 100 (600)	CF100CG	10	4.72	120	3.98	101	0.08	2.00
CF 150 (800)	CF150CG	5	6.73	171	5.98	152	0.08	2.00
CF 200 (1000)	CF200CG	5	8.74	222	7.99	203	0.08	2.00
CF 250 (1325)	CF250CG	5	11.57	294	10.59	269	0.08	2.00

SHANTENG VACUUM

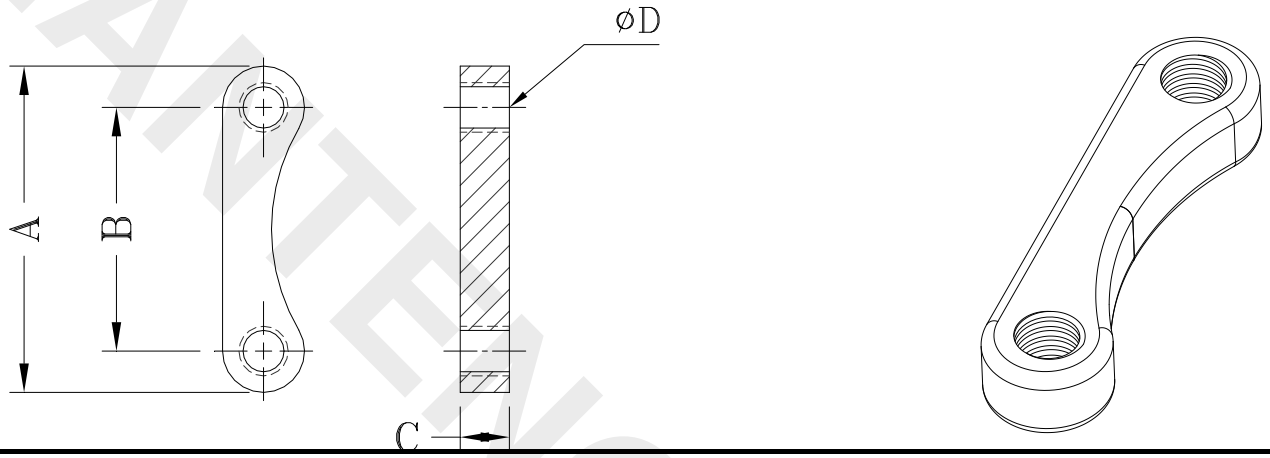

Plate Nut

Size	Model No.	Material	A in	A mm	B in	B mm	C in	C mm	D in
CF 16 (133)	CF16PN	304 S.S.	0.77	19.5	0.53	13.5	0.16	4.00	8-32
CF 35 (275)	CF35PN	304 S.S.	1.56	39.5	1.16	29.5	0.24	6.00	1/4-28
CF 63 (450)	CF63PN	304 S.S.	1.98	50.2	1.39	35.2	0.31	8.00	5/16-24

SHANTENG VACUUM

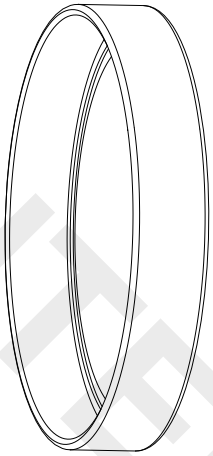

Cap		
Fits Flange	**Model No.**	**Material**
CF 16 (133)	CF16CAP	Polyethylene
CF 35 (275)	CF35CAP	Polyethylene
CF 63 (450)	CF63CAP	Polyethylene
CF 100 (600)	CF100CAP	Polyethylene
CF 150 (800)	CF150CAP	Polyethylene
CF 200 (1000)	CF200CAP	Polyethylene

SHANTENG VACUUM

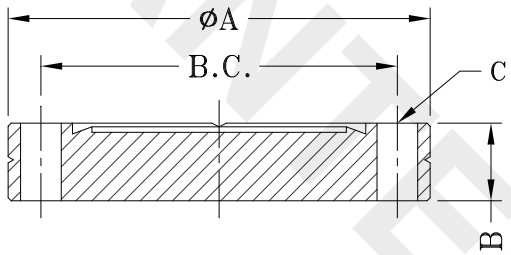

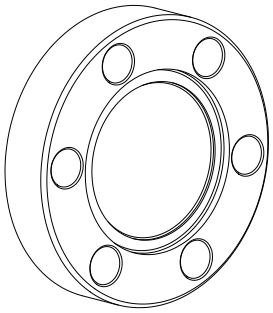

Blank- Nonrotatable

Size	Model No.	Material	A		B		C		B.C.	
			in	mm	in	mm	in	mm		
CF 16 (133)	CF16B	304 S.S.	1.33	33.8	0.30	7.5	0.173 x 6	4.4 x 6	1.06	26.9
CF 35 (275)	CF35B	304 S.S.	2.74	69.5	0.50	12.7	0.264 x 6	6.7 x 6	2.31	58.7
CF 63 (450)	CF63B	304 S.S.	4.47	113.6	0.71	18.0	0.331 x 8	8.4 x 8	3.63	92.1
CF 100 (600)	CF100B	304 S.S.	5.97	151.6	0.79	20.0	0.331 x 16	8.4 x 16	5.13	130.3
CF 150 (800)	CF150B	304 S.S.	7.97	202.5	0.87	22.0	0.331 x 20	8.4 x 20	7.13	181.0
CF 200 (1000)	CF200B	304 S.S.	9.97	253.2	0.97	24.7	0.331 x 24	8.4 x 24	9.13	231.8
CF 250 (1325)	CF250B	304 S.S.	13.25	336.5	1.12	28.5	0.406 x 30	10.3 x 30	12.07	306.5
CF 300 (1400)	CF300B	304 S.S.	14.00	355.6	1.12	28.5	0.406 x 30	10.3 x 30	12.82	325.7
CF 350 (1650)	CF350B	304 S.S.	16.50	419.1	1.12	28.5	0.406 x 36	10.3 x 36	15.31	388.9

SHANTENG VACUUM

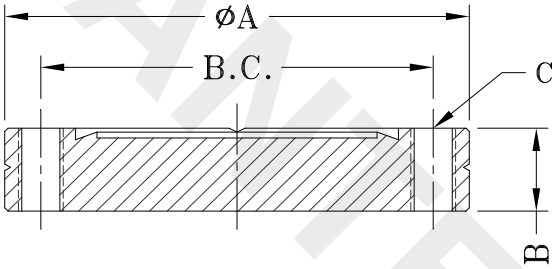

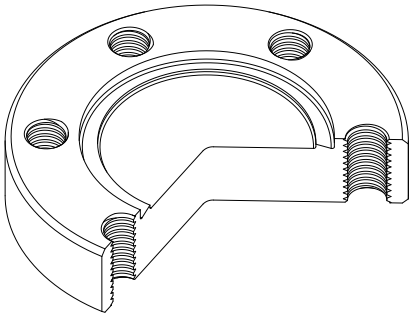

Blank-Nonrotatable-Tapped Bolt Holes

Size	Model No.	Material	A in	A mm	B in	B mm	C in	B.C.	B.C.
CF 16 (133)	CF16BTAP	304 S.S.	1.33	33.8	0.30	7.5	8-32 x 6	1.06	26.9
CF 35 (275)	CF35BTAP	304 S.S.	2.74	69.5	0.50	12.7	1/4-28 x 6	2.31	58.7
CF 63 (450)	CF63BTAP	304 S.S.	4.47	113.6	0.71	18.0	5/16-24 x 8	3.63	92.1
CF 100 (600)	CF100BTAP	304 S.S.	5.97	151.6	0.79	20.0	5/16-24 x 16	5.13	130.3
CF 150 (800)	CF150BTAP	304 S.S.	7.97	202.5	0.87	22.0	5/16-24 x 20	7.13	181.0
CF 200 (1000)	CF200BTAP	304 S.S.	9.97	253.2	0.97	24.7	5/16-24 x 24	9.13	231.8
CF 250 (1325)	CF250BTAP	304 S.S.	13.25	336.5	1.12	28.5	3/8-24 x 30	12.07	306.5
CF 300 (1400)	CF300BTAP	304 S.S.	14.00	355.6	1.12	28.5	3/8-24 x 30	12.82	325.7
CF 350 (1650)	CF350BTAP	304 S.S.	16.50	419.1	1.12	28.5	3/8-24 x 36	15.31	388.9

SHANTENG VACUUM

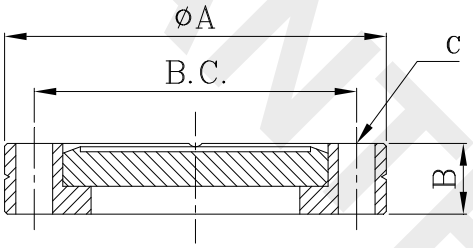

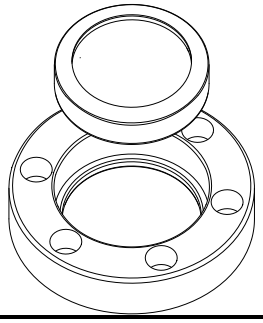

Blank - Rotatable

Size	Model No.	Material	A		B		C		B.C.	
			in	mm	in	mm	in	mm		
CF 16 (133)	CR16B	304 S.S.	1.33	33.8	0.30	7.5	0.173 x 6	4.4 x 6	1.06	26.9
CF 35 (275)	CR35B	304 S.S.	2.74	69.5	0.50	12.7	0.264 x 6	6.7 x 6	2.31	58.7
CF 63 (450)	CR63B	304 S.S.	4.47	113.6	0.75	19.0	0.331 x 8	8.4 x 8	3.63	92.1
CF 100 (600)	CR100B	304 S.S.	5.97	151.6	0.85	21.5	0.331 x 16	8.4 x 16	5.13	130.3
CF 150 (800)	CR150B	304 S.S.	7.97	202.5	0.94	24.0	0.331 x 20	8.4 x 20	7.13	181.0
CF 200 (1000)	CR200B	304 S.S.	9.97	253.2	0.97	24.7	0.331 x 24	8.4 x 24	9.13	231.8
CF 250 (1325)	CR250B	304 S.S.	13.25	336.5	1.12	28.5	0.406 x 30	10.3 x 30	12.07	306.5
CF 300 (1400)	CR300B	304 S.S.	14.00	355.6	1.12	28.5	0.406 x 30	10.3 x 30	12.82	325.7
CF 350 (1650)	CR350B	304 S.S.	16.50	419.1	1.12	28.5	0.406 x 36	10.3 x 36	15.31	388.9

SHANTENG VACUUM

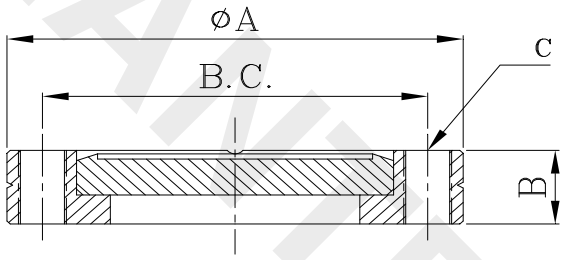

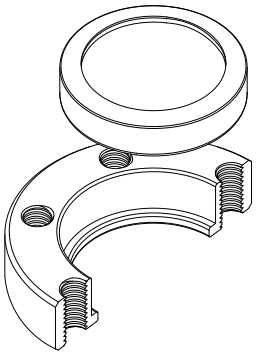

Blank- Rotatable-Tapped Bolt Holes

Size	Model No.	Material	A in	A mm	B in	B mm	C in	B.C.	
CF 16 (133)	CR16BTAP	304 S.S.	1.33	33.8	0.30	7.5	8-32 x 6	1.06	26.9
CF 35 (275)	CR35BTAP	304 S.S.	2.74	69.5	0.50	12.7	1/4-28 x 6	2.31	58.7
CF 63 (450)	CR63BTAP	304 S.S.	4.47	113.6	0.75	19.0	5/16-24 x 8	3.63	92.1
CF 100 (600)	CR100BTAP	304 S.S.	5.97	151.6	0.85	21.5	5/16-24 x 16	5.13	130.3
CF 150 (800)	CR150BTAP	304 S.S.	7.97	202.5	0.94	24.0	5/16-24 x 20	7.13	181.0
CF 200 (1000)	CR200BTAP	304 S.S.	9.97	253.2	0.97	24.7	5/16-24 x 24	9.13	231.8
CF 250 (1325)	CR250BTAP	304 S.S.	13.25	336.5	1.12	28.5	3/8-24 x 30	12.07	306.5
CF 300 (1400)	CR300BTAP	304 S.S.	14.00	355.6	1.12	28.5	3/8-24 x 30	12.82	325.7
CF 350 (1650)	CR350BTAP	304 S.S.	16.50	419.1	1.12	28.5	3/8-24 x 36	15.31	388.9

SHANTENG VACUUM

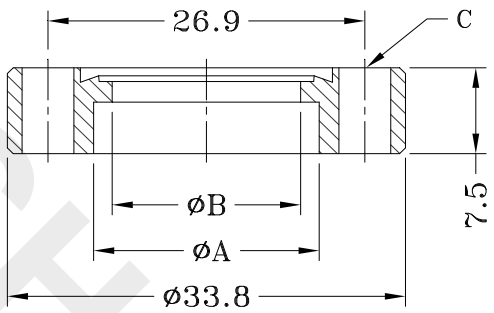

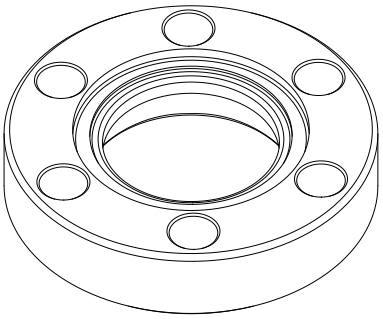

Bored Blank (CF16)-Nonrotatable							
Description	Model	Material	A in	A mm	B in	B mm	C in
CF 16 (133)	CF16B7	304 S.S.	0.26	6.50	0.22	5.50	4.4 x 6
CF 16 (133)	CF16B12	304 S.S.	0.51	12.90	0.41	10.40	4.4 x 6
CF 16 (133)	CF16B19	304 S.S.	0.75	19.15	0.63	16.00	4.4 x 6

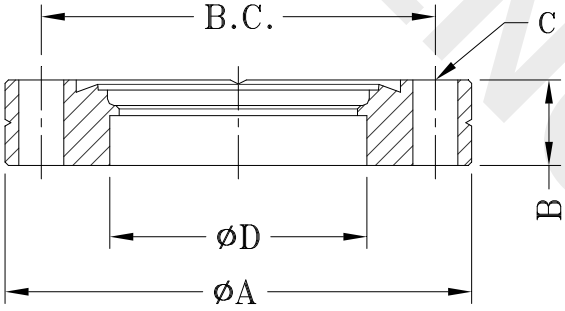

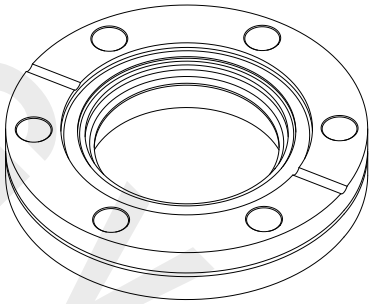

Bored Flange - Nonrotatable												
Size	Model No.	Material	A in	A mm	B in	B mm	C in	C mm	D in	D mm	B.C.	
CF 35 (275)	DY-CF35B25	304 S.S.	2.74	69.5	0.50	12.7	0.264 x 6	6.7 x 6	1.01	25.6	2.31	58.7
CF 35 (275)	DY-CF35B38	304 S.S.	2.74	69.5	0.50	12.7	0.264 x 6	6.7 x 6	1.51	38.3	2.31	58.7
CF 35 (275)	DY-CF35B42	304 S.S.	2.74	69.5	0.50	12.7	0.264 x 6	6.7 x 6	1.69	42.9	2.31	58.7
CF 63 (450)	DY-CF63B51	304 S.S.	4.47	113.6	0.71	18.0	0.331 x 8	8.4 x 8	2.01	51.1	3.63	92.1
CF 63 (450)	DY-CF63B63	304 S.S.	4.47	113.6	0.71	18.0	0.331 x 8	8.4 x 8	2.51	63.7	3.63	92.1
CF 100 (600)	DY-CF100B102	304 S.S.	5.97	151.6	0.79	20.0	0.331 x 16	8.4 x 16	4.01	101.8	5.13	130.3
CF 150 (800)	DY-CF150B153	304 S.S.	7.97	202.5	0.87	22.0	0.331 x 20	8.4 x 20	6.03	153.1	7.13	181.0
CF 200 (1000)	DY-CF200B204	304 S.S.	9.97	253.2	0.97	24.7	0.331 x 24	8.4 x 24	8.02	203.7	9.13	231.8
CF 250 (1325)	DY-CF250B255	304 S.S.	13.25	336.5	1.12	28.5	0.406 x 30	10.3 x 30	10.02	254.5	12.07	306.5
CF 300 (1650)	DY-CF300B305	304 S.S.	14.00	355.6	1.12	28.5	0.406 x 30	10.3 x 30	12.02	305.4	12.82	325.7
CF 350 (1650)	DY-CF350B356	304 S.S.	16.50	419.1	1.12	28.5	0.406 x 36	10.3 x 36	14.02	356.1	15.31	388.9

SHANENG VACUUM

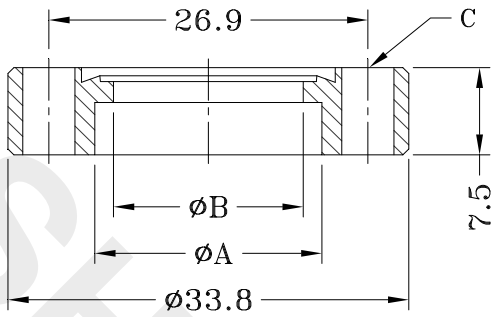

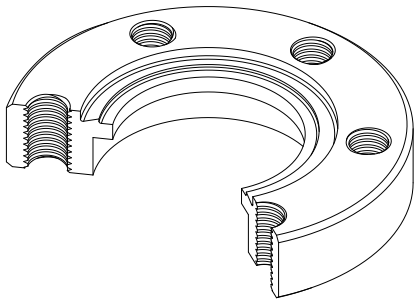

Bored Blank (CF16) - Nonrotatable-Tapped Bolt Holes							
Size	Model No.	Material	A		B		C
			in	mm	in	mm	
CF 16 (133)	CF16B7TAP	304 S.S.	0.26	6.50	0.22	5.50	8-32 x 6
CF 16 (133)	CF16B12TAP	305 S.S.	0.51	12.90	0.41	10.40	8-32 x 6
CF 16 (133)	CF16B19TAP	304 S.S.	0.75	19.15	0.63	16.00	8-32 x 6

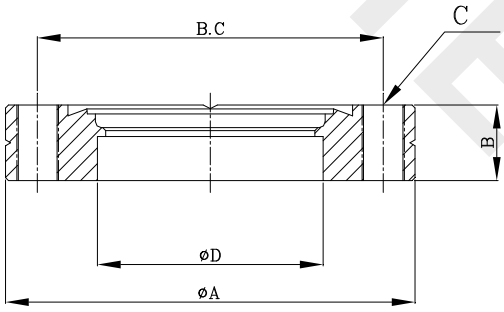

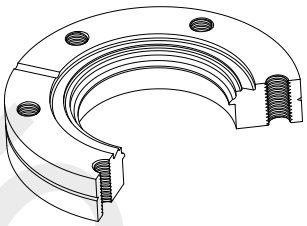

Bored Flange - Nonrotatable-Tapped Bolt-Holes											
Size	Model No.	Material	A		B		C	D		B.C.	
			in	mm	in	mm	in	in	mm		
CF 35 (275)	CF35B25TAP	304 S.S.	2.74	69.5	0.50	12.7	1/4-28 x 6	1.01	25.6	2.31	58.7
CF 35 (275)	CF35B38TAP	304 S.S.	2.74	69.5	0.50	12.7	1/4-28 x 6	1.51	38.3	2.31	58.7
CF 35 (275)	CF35B42TAP	304 S.S.	2.74	69.5	0.50	12.7	1/4-28 x 6	1.69	42.9	2.31	58.7
CF 63 (450)	CF63B51TAP	304 S.S.	4.47	113.6	0.71	18.0	5/16-24 x 8	2.01	51.1	3.63	92.1
CF 63 (450)	CF63B63TAP	304 S.S.	4.47	113.6	0.71	18.0	5/16-24 x 8	2.51	63.7	3.63	92.1
CF 100 (600)	CF100B102TAP	304 S.S.	5.97	151.6	0.79	20.0	5/16-24 x 16	4.01	101.8	5.13	130.3
CF 150 (800)	CF150B153TAP	304 S.S.	7.97	202.5	0.87	22.0	5/16-24 x 20	6.03	153.1	7.13	181.0
CF 200 (1000)	CF200B204TAP	304 S.S.	9.97	253.2	0.97	24.7	5/16-24 x 24	8.02	203.7	9.13	231.8
CF 250 (1325)	CF250B255TAP	304 S.S.	13.25	336.5	1.12	28.5	3/8-24 x 30	10.02	254.5	12.07	306.5
CF 300 (1400)	CF300B305TAP	304 S.S.	14.00	355.6	1.12	28.5	3/8-24 x 30	12.02	305.4	12.82	325.7
CF 350 (1650)	CF350B356TAP	304 S.S.	16.50	419.1	1.12	28.5	3/8-24 x 36	14.02	356.1	15.31	388.9

SHANTENG VACUUM

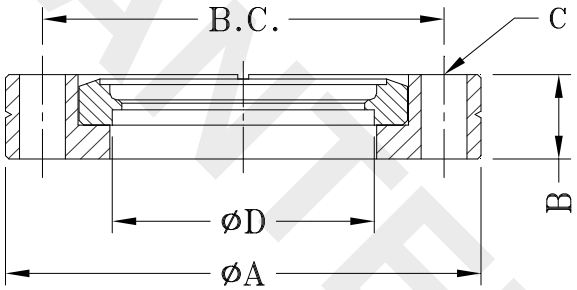

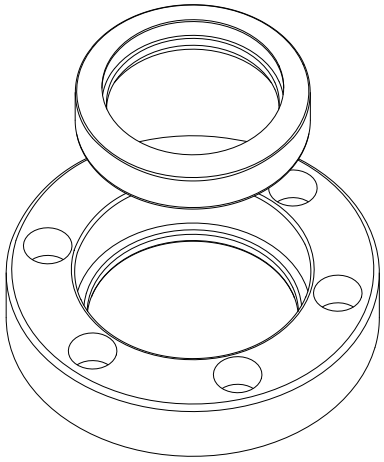

Bored Flange - Rotatable

Size	Model No.	Material	A in	A mm	B in	B mm	C in	C mm	D in	D mm	B.C.	
CF 35 (275)	CR35B25	304 S.S.	2.74	69.5	0.50	12.7	0.264 x 6	6.7 x 6	1.01	25.6	2.31	58.7
CF 35 (275)	CR35B38	304 S.S.	2.74	69.5	0.50	12.7	0.264 x 6	6.7 x 6	1.51	38.3	2.31	58.7
CF 35 (275)	CR35B42	304 S.S.	2.74	69.5	0.50	12.7	0.264 x 6	6.7 x 6	1.69	42.9	2.31	58.7
CF 63 (450)	CR63B51	304 S.S.	4.47	113.6	0.75	19.0	0.331 x 8	8.4 x 8	2.01	51.1	3.63	92.1
CF 63 (450)	CR63B63	304 S.S.	4.47	113.6	0.75	19.0	0.331 x 8	8.4 x 8	2.51	63.7	3.63	92.1
CF 100 (600)	CR100B102	304 S.S.	5.97	151.6	0.85	21.5	0.331 x 16	8.4 x 16	4.01	101.8	5.13	130.3
CF 150 (800)	CR150B153	304 S.S.	7.97	202.5	0.94	24.0	0.331 x 20	8.4 x 20	6.03	153.1	7.13	181.0
CF 200 (1000)	CR200B204	304 S.S.	9.97	253.2	0.97	24.7	0.331 x 24	8.4 x 24	8.02	203.7	9.13	231.8
CF 250 (1325)	CR250B255	304 S.S.	13.25	336.5	1.12	28.5	0.406 x 30	10.3 x 30	10.02	254.5	12.07	306.5
CF 300 (1650)	CR300B305	304 S.S.	14.00	355.6	1.12	28.5	0.406 x 30	10.3 x 30	12.02	305.4	12.82	325.7
CF 350 (1650)	CR350B356	304 S.S.	16.50	419.1	1.12	28.5	0.406 x 36	10.3 x 36	14.02	356.1	15.31	388.9

SHANTENG VACUUM

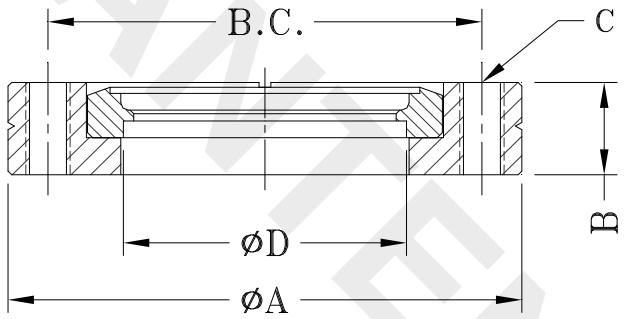

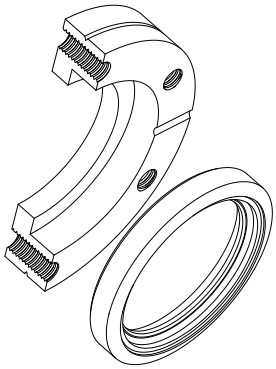

Bored Flange - Rotatable-Tapped Bolt-Holes

Size	Model No.	Material	A in	A mm	B in	B mm	C in	D in	D mm	B.C.	B.C.
CF 35 (275)	CR35B25TAP	304 S.S.	2.74	69.5	0.50	12.7	1/4-28 x 6	1.01	25.6	2.31	58.7
CF 35 (275)	CR35B38TAP	304 S.S.	2.74	69.5	0.50	12.7	1/4-28 x 6	1.51	38.3	2.31	58.7
CF 35 (275)	CR35B42TAP	304 S.S.	2.74	69.5	0.50	12.7	1/4-28 x 6	1.69	42.9	2.31	58.7
CF 63 (450)	CR63B51TAP	304 S.S.	4.47	113.6	0.75	19.0	5/16-24 x 8	2.01	51.1	3.63	92.1
CF 63 (450)	CR63B63TAP	304 S.S.	4.47	113.6	0.75	19.0	5/16-24 x 8	2.51	63.7	3.63	92.1
CF 100 (600)	CR100B102TAP	304 S.S.	5.97	151.6	0.85	21.5	5/16-24 x 16	4.01	101.8	5.13	130.3
CF 150 (800)	CR150B153TAP	304 S.S.	7.97	202.5	0.94	24.0	5/16-24 x 20	6.03	153.1	7.13	181.0
CF 200 (1000)	CR200B204TAP	304 S.S.	9.97	253.2	0.97	24.7	5/16-24 x 24	8.02	203.7	9.13	231.8
CF 250 (1325)	CR250B255TAP	304 S.S.	13.25	336.5	1.12	28.5	3/8-24 x 30	10.02	254.5	12.07	306.5
CF 300 (1400)	CR300B305TAP	304 S.S.	14.00	355.6	1.12	28.5	3/8-24 x 30	12.02	305.4	12.82	325.7
CF 350 (1650)	CR350B356TAP	304 S.S.	16.50	419.1	1.12	28.5	3/8-24 x 36	14.02	356.1	15.31	388.9

SHANTENG VACUUM

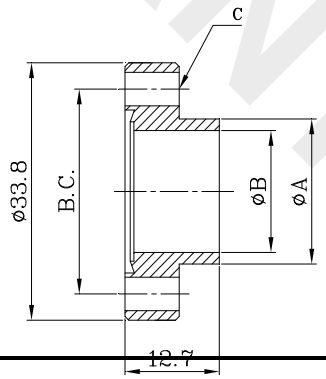

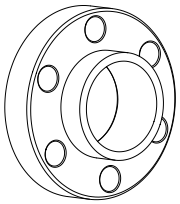

Bored Blank-Neck (CF16) - Nonrotatable

Size	Model No.	Material	A		B		C		B.C.
			in	mm	in	mm	in	mm	
CF 16 (133)	CF16B7N	304 S.S.	0.25	6.35	0.18	4.50	.173 x 6	4.4 x 6	26.90
CF 16 (133)	CF16B12N	305 S.S.	0.50	12.70	0.37	9.50	.173 x 6	4.4 x 6	26.90
CF 16 (133)	CF16B19N	304 S.S.	0.75	19.05	0.63	16.00	.173 x 6	4.4 x 6	26.90

SHANTENG VACUUM

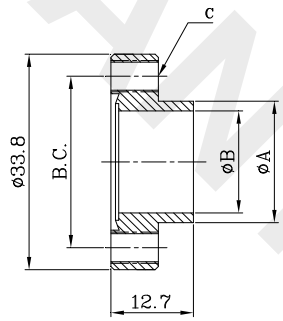

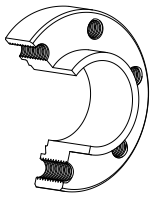

Bored Blank-Neck (CF16) - Nonrotatable-Tapped Bolt Holes								
Size	**Model No.**	**Material**	**A**		**B**		**C**	**B.C.**
			in	**mm**	**in**	**mm**	**in**	
CF 16 (133)	CF16B7TAPN	304 S.S.	0.25	6.35	0.18	4.50	8-32 x 6	26.90
CF 16 (133)	CF16B12TAPN	304 S.S.	0.50	12.70	0.37	9.50	8-32 x 6	26.90
CF 16 (133)	CF16B19TAPN	304 S.S.	0.75	19.05	0.63	16.00	8-32 x 6	26.90

SHANTENG VACUUM

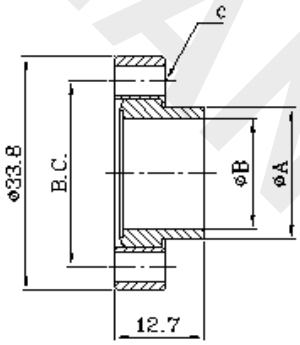

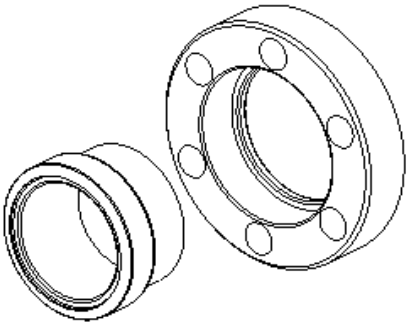

Bored Blank-Neck (CR16) - Rotatable

Size	Model No.	Material	A in	A mm	B in	B mm	C in	C mm	B.C.
CF 16 (133)	CR16B7N	304 S.S.	0.25	6.35	0.18	4.50	.173 x 6	4.4 x 6	26.90
CF 16 (133)	CR16B12N	304 S.S.	0.50	12.70	0.37	9.50	.173 x 6	4.4 x 6	26.90
CF 16 (133)	CR16B19N	304 S.S.	0.75	19.05	0.63	16.00	.173 x 6	4.4 x 6	26.90

SHANTENG VACUUM

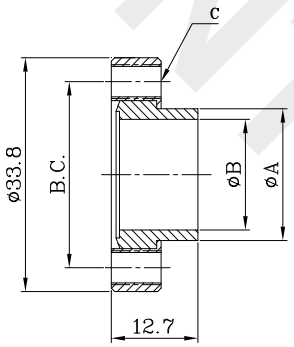

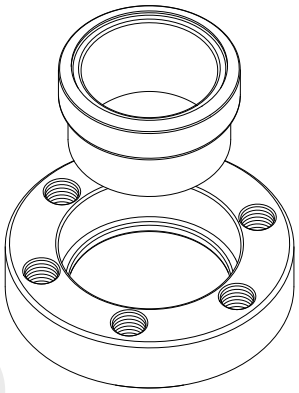

Bored Blank-Neck (CR16)- Rotatable-Tapped Bolt Holes

Size	Model No.	Material	A		B		C	B.C.
			in	mm	in	mm		
CF 16 (133)	CR16B7TAPN	304 S.S.	0.25	6.35	0.18	4.50	8-32 x 6	26.90
CF 16 (133)	CR16B12TAPN	304 S.S.	0.50	12.70	0.37	9.50	8-32 x 6	26.90
CF 16 (133)	CR16B19TAPN	304 S.S.	0.75	19.05	0.63	16.00	8-32 x 6	26.90

SHANTENG VACUUM

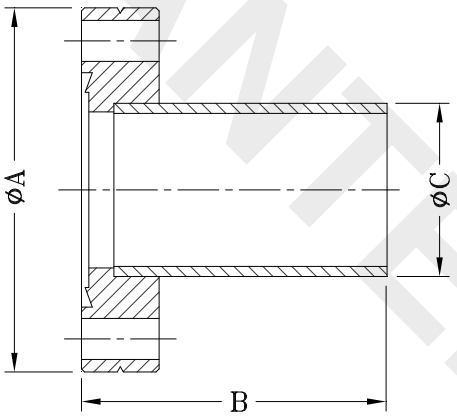

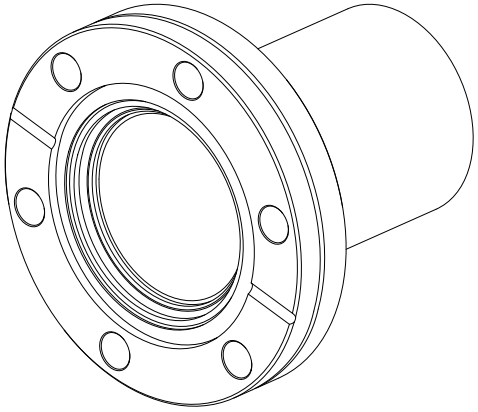

Half Nipple - Nonrotatable

Size	Model No.	Material	A		B		C	
			in	mm	in	mm	in	mm
CF 16 (133)	CF16HN	304 S.S.	1.33	33.8	1.50	38.0	0.75	19.05
CF 35 (275)	CF35HN	304 S.S.	2.74	69.5	2.48	63.0	1.50	38.10
CF 63 (450)	CF63HN	304 S.S.	4.47	113.6	4.13	105.0	2.50	63.50
CF 100 (600)	CF100HN	304 S.S.	5.97	151.6	5.31	135.0	4.00	101.60
CF 150 (800)	CF150HN	304 S.S.	7.97	202.5	6.57	167.0	6.00	152.40
CF 200 (1000)	CF200HN	304 S.S.	9.97	253.2	6.57	167.0	8.00	203.20

SHANTENG VACUUM

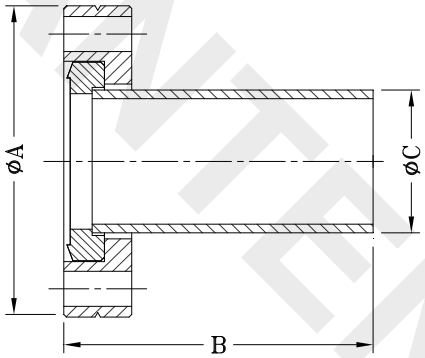

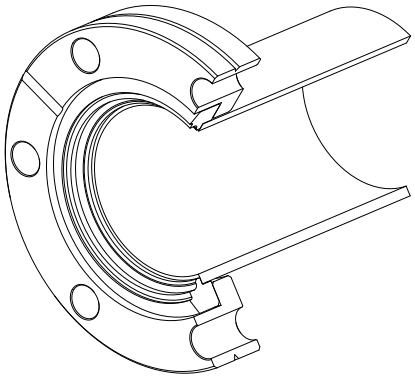

Half Nipple- Rotatable

Size	Model No.	Material	A		B		C	
			in	mm	in	mm	in	mm
CF 16 (133)	CR16HN	304 S.S.	1.33	33.8	1.50	38.0	0.75	19.05
CF 35 (275)	CR35HN	304 S.S.	2.74	69.5	2.48	63.0	1.50	38.10
CF 63 (450)	CR63HN	304 S.S.	4.47	113.6	4.13	105.0	2.50	63.50
CF 100 (600)	CR100HN	304 S.S.	5.97	151.6	5.31	135.0	4.00	101.60
CF 150 (800)	CR150HN	304 S.S.	7.97	202.5	6.57	167.0	6.00	152.40
CF 200 (1000)	CR200HN	304 S.S.	9.97	253.2	6.57	167.0	8.00	203.20

SHANTENG VACUUM

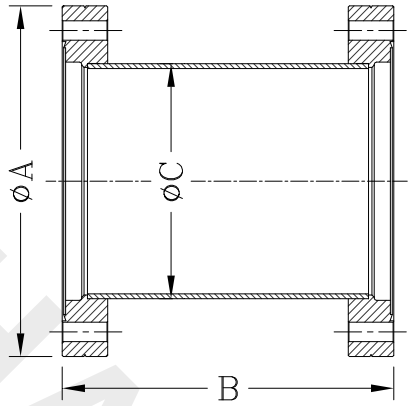

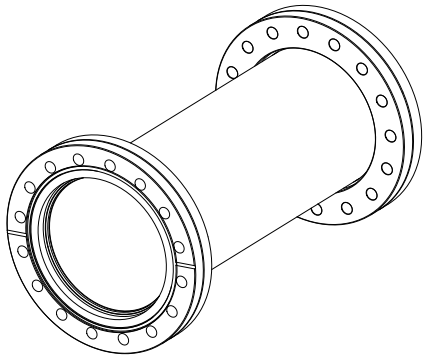

CF Nipples - Fixed

Size	Model No.	Material	A		B		C	
			in	mm	in	mm	in	mm
CF 16 (133)	CF16N	304 S.S.	1.33	33.8	2.99	76	0.75	19.05
CF 35 (275)	CF35N	304 S.S.	2.74	69.5	4.96	126	1.50	38.10
CF 63 (450)	CF63N	304 S.S.	4.47	113.6	8.27	210	2.50	63.50
CF 100 (600)	CF100N	304 S.S.	5.97	151.6	10.63	270	4.00	101.60
CF 150 (800)	CF150N	304 S.S.	7.97	202.5	13.15	334	6.00	152.40
CF 200 (1000)	CF200N	304 S.S.	9.97	253.2	13.15	334	8.00	203.20

SHANTENG VACUUM

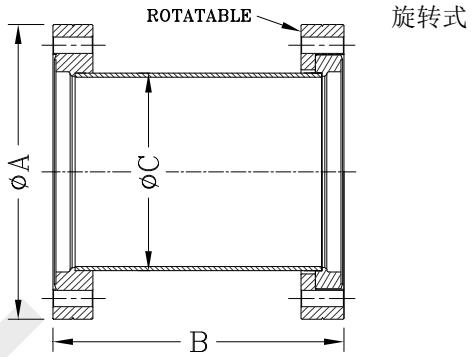

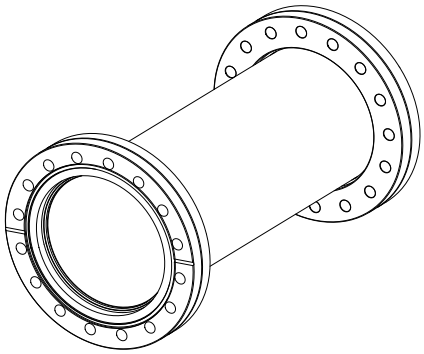

CF Nipples- 1 Flange Rotatable

Size	Model No.	Material	A		B		C	
			in	mm	in	mm	in	mm
CF 16 (133)	CF16NR	304 S.S.	1.33	33.8	2.99	76	0.75	19.05
CF 35 (275)	CF35NR	304 S.S.	2.74	69.5	4.96	126	1.50	38.10
CF 63 (450)	CF63NR	304 S.S.	4.47	113.6	8.27	210	2.50	63.50
CF 100 (600)	CF100NR	304 S.S.	5.97	151.6	10.63	270	4.00	101.60
CF 150 (800)	CF150NR	304 S.S.	7.97	202.5	13.15	334	6.00	152.40
CF 200 (1000)	CF200NR	304 S.S.	9.97	253.2	13.15	334	8.00	203.20

SHANTENG VACUUM

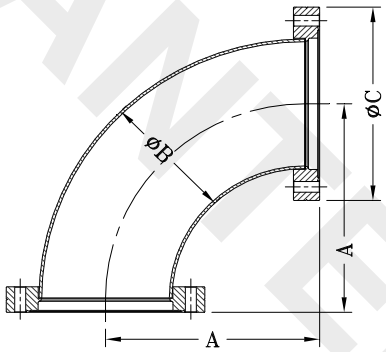

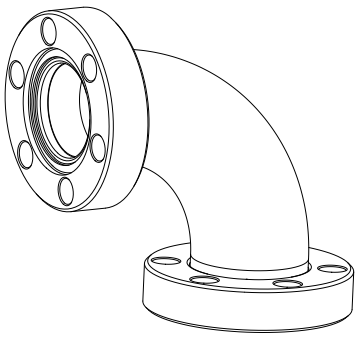

CF90° Elbows-Fixed

Size	Model No.	Material	A		B		C	
			in	mm	in	mm	in	mm
CF 16 (133)	CF16EL90	304 S.S.	1.48	37.5	0.75	19.05	1.33	33.8
CF 35 (275)	CF35EL90	304 S.S.	3.15	79.9	1.50	38.10	2.74	69.5
CF 63 (450)	CF63EL90	304 S.S.	5.56	141.3	2.50	63.50	4.47	113.6
CF 100 (600)	CF100EL90	304 S.S.	8.75	222.2	4.00	101.60	5.97	151.6
CF 150 (800)	CF150EL90	304 S.S.	9.50	241.3	6.00	152.40	7.97	202.5

SHANTENG VACUUM

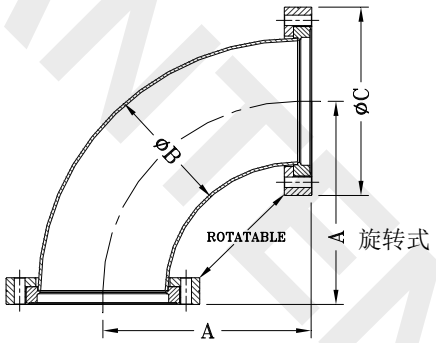

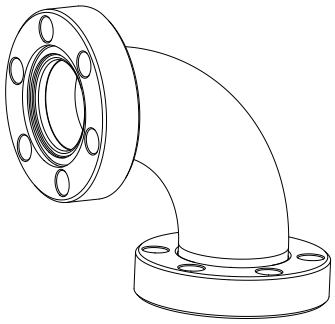

CF90°Elbow-Rotatable

Size	Model No	Material	A		B		C	
			in	mm	in	mm	in	mm
CF 16 (133)	CR16EL90	304 S.S.	1.86	47.2	0.75	19.05	1.33	33.8
CF 35 (275)	CR35EL90	304 S.S.	3.15	79.9	1.50	38.10	2.74	69.5
CF 63 (450)	CR63EL90	304 S.S.	5.56	141.3	2.50	63.50	4.47	113.6
CF 100 (600)	CR100EL90	304 S.S.	8.75	222.2	4.00	101.60	5.97	151.6
CF 150 (800)	CR150EL90	304 S.S.	9.50	241.3	6.00	152.40	7.97	202.5

SHANTENG VACUUM

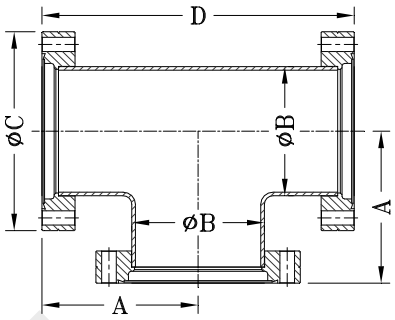

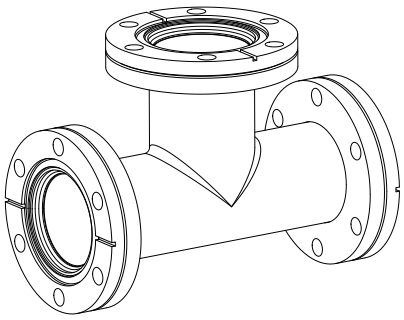

CF Tees - Fixed

Size	Model No.	Material	A		B		C		D	
			in	mm	in	mm	in	mm	in	mm
CF 16 (133)	CF16T	304 S.S.	1.48	37.5	0.75	19.05	1.33	33.8	2.95	75.0
CF 35 (275)	CF35T	304 S.S.	2.46	62.5	1.50	38.10	2.74	69.5	4.92	125.0
CF 63 (450)	CF63T	304 S.S.	3.37	85.7	2.50	63.50	4.47	113.6	6.75	171.4
CF 100 (600)	CF100T	304 S.S.	4.31	109.5	4.00	101.60	5.97	151.6	8.62	219.0
CF 150 (800)	CF150T	304 S.S.	5.50	139.7	6.00	152.40	7.97	202.5	11.00	279.4

SHANMENG VACUUM

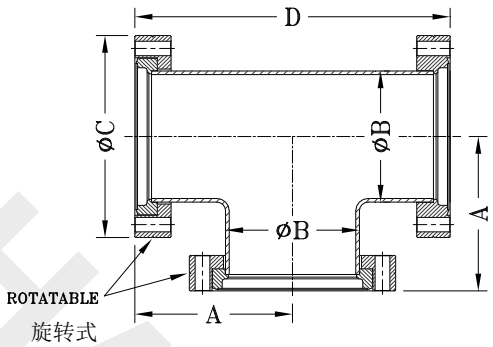

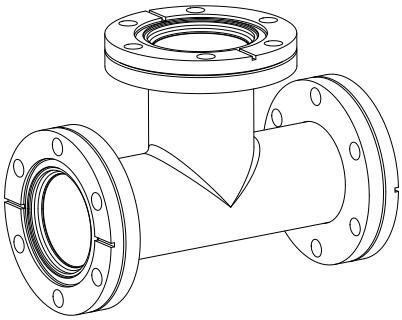

CF Tees - 2 Flanges Rotatable

Size	Model No.	Material	A		B		C		D	
			in	mm	in	mm	in	mm	in	mm
CF 16 (133)	CR16T	304 S.S.	1.86	47.2	0.75	19.05	1.33	33.8	3.72	94.4
CF 35 (275)	CR35T	304 S.S.	2.46	62.5	1.50	38.10	2.74	69.5	4.92	125.0
CF 63 (450)	CR63T	304 S.S.	3.37	85.7	2.50	63.50	4.47	113.6	6.75	171.4
CF 100 (600)	CR100T	304 S.S.	4.31	109.5	4.00	101.60	5.97	151.6	8.62	219.0
CF 150 (800)	CR150T	304 S.S.	5.50	139.7	6.00	152.40	7.97	202.5	11.00	279.4

SHANMENG VACUUM

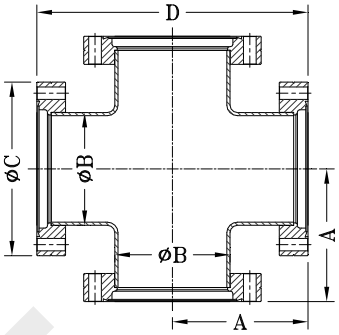

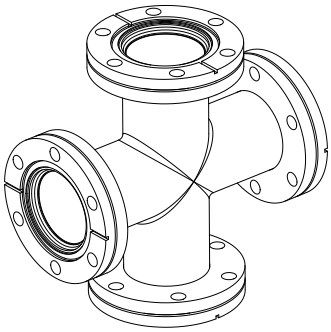

CF 4 Way Crosses - Fixed

Size	Model No.	Material	A		B		C		D	
			in	mm	in	mm	in	mm	in	mm
CF 16 (133)	CF16X	304 S.S.	1.48	37.5	0.75	19.05	1.33	33.8	2.95	75.0
CF 35 (275)	CF35X	304 S.S.	2.46	62.5	1.50	38.10	2.74	69.5	4.92	125.0
CF 63 (450)	CF63X	304 S.S.	3.37	85.7	2.50	63.50	4.47	113.6	6.75	171.4
CF 100 (600)	CF100X	304 S.S.	4.31	109.5	4.00	101.60	5.97	151.6	8.62	219.0
CF 150 (800)	CF150X	304 S.S.	5.50	139.7	6.00	152.40	7.97	202.5	11.00	279.4

SHANGHENG VACUUM

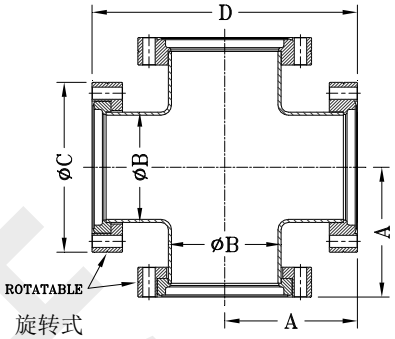

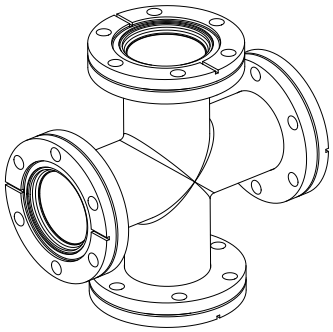

CF 4 Way Crosses 2 - Falnges Rotatable

Size	Model No.	Material	A		B		C		D	
			in	mm	in	mm	in	mm	in	mm
CF 16 (133)	CR16X	304 S.S.	1.86	47.2	0.75	19.05	1.33	33.8	3.72	94.4
CF 35 (275)	CR35X	304 S.S.	2.46	62.5	1.50	38.10	2.74	69.5	4.92	125.0
CF 63 (450)	CR63X	304 S.S.	3.37	85.7	2.50	63.50	4.47	113.6	6.75	171.4
CF 100 (600)	CR100X	304 S.S.	4.31	109.5	4.00	101.60	5.97	151.6	8.62	219.0
CF 150 (800)	CR150X	304 S.S.	5.50	139.7	6.00	152.40	7.97	202.5	11.00	279.4

SHANTENG VACUUM

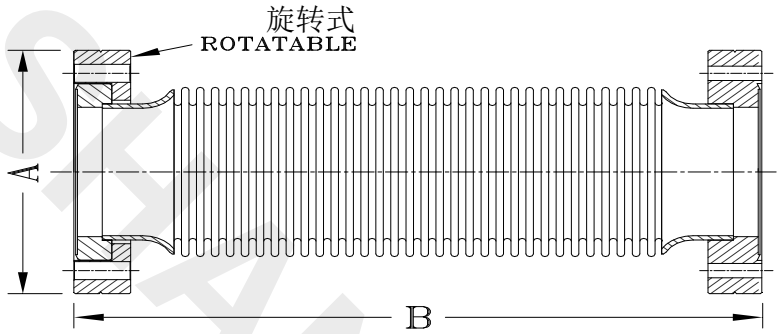

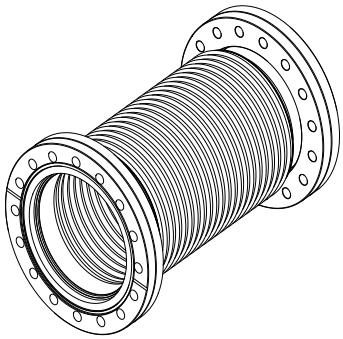

CF Flexible Hoses - 1 Flange Rotatable

Size	Model No.	Material	A		B	
			in	mm	in	mm
CF16 x 250	CF16FX250R	304 S.S.	1.33	33.8	9.84	250
CF16 x 500	CF16FX500R	304 S.S.	1.33	33.8	19.69	500
CF16 x 750	CF16FX750R	304 S.S.	1.33	33.8	29.53	750
CF16 x 100	CF16FX1000R	304 S.S.	1.33	33.8	39.37	1,000
CF35 x 250	CF35FX250R	304 S.S.	2.74	69.5	9.84	250
CF35 x 500	CF35FX500R	304 S.S.	2.74	69.5	19.69	500
CF35 x 750	CF35FX750R	304 S.S.	2.74	69.5	29.53	750
CF35 x 1000	CF35FX1000R	304 S.S.	2.74	69.5	39.37	1,000
CF63 x 250	CF63FX250R	304 S.S.	4.47	113.6	9.84	250
CF63 x 500	CF63FX500R	304 S.S.	4.47	113.6	19.69	500
CF63 x 750	CF63FX750R	304 S.S.	4.47	113.6	29.53	750
CF63 x 1000	CF63FX1000R	304 S.S.	4.47	113.6	39.37	1,000
CF100 x 250	CF100FX250R	304 S.S.	5.97	151.6	9.84	250
CF100 x 500	CF100FX500R	304 S.S.	5.97	151.6	19.69	500
CF100 x 750	CF100FX750R	304 S.S.	5.97	151.6	29.53	750
CF100 x 1000	CF100FX1000R	304 S.S.	5.97	151.6	39.37	1,000

SHANTENG VACUUM

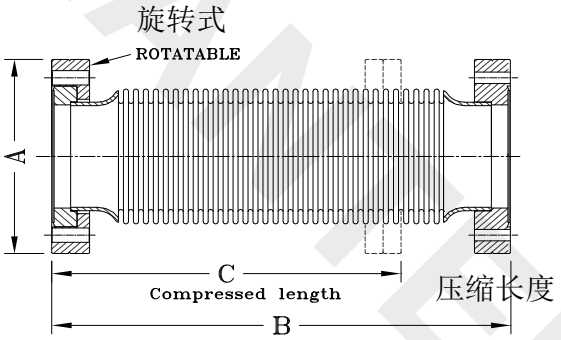

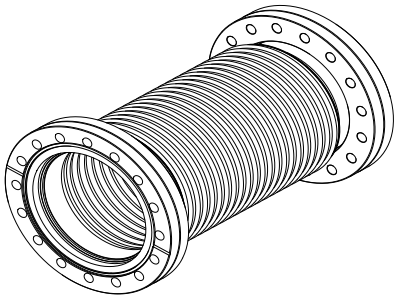

CF Compressible Bellows Connections - 1 Flange Rotatable

Size	Model No.	Material	A		B		C	
			in	mm	in	mm	in	mm
CF16 x 150	CF16FXC150R	304 S.S.	1.33	33.8	5.91	150	5.12	130.0
CF35 x 180	CF35FXC180R	304 S.S.	2.74	69.5	7.09	180	6.30	160.0
CF63 x 210	CF63FXC210R	304 S.S.	4.47	113.6	8.27	210	7.48	190.0
CF100 x 270	CF100FXC270R	304 S.S.	5.97	151.6	10.63	270	9.84	250.0

SHANGHENG VACUUM

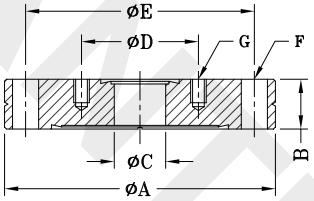

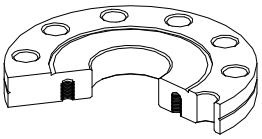

Reducing Flange

Size	Model No.	Material	A		B		C		D		E		F		G
			in	mm	in	mm	in	mm	in	mm	in	mm	in	mm	in
CF 35 (275) x CF16 (133)	CF35RF16	304 S.S.	2.74	69.5	0.50	12.7	0.62	15.8	1.06	26.9	2.31	58.7	0.264 x 6	6.7 x 6	8-32 x 6
CF 63 (450) x CF16 (133)	CF63RF16	304 S.S.	4.47	113.6	0.71	18.0	0.62	15.8	1.06	26.9	3.63	92.1	0.331 x 8	8.4 x 8	8-32 x 6
CF 63 (450) x CF35 (275)	CF63RF35	304 S.S.	4.47	113.6	0.71	18.0	1.50	38.1	2.31	58.7	3.63	92.1	0.331 x 8	8.4 x 8	1/4-28 x 6
CF 100 (600) x CF35 (275)	CF100RF35	304 S.S.	5.97	151.6	0.79	20.0	1.50	38.1	2.31	58.7	5.13	130.3	0.331 x 16	8.4 x 16	1/4-28 x 6
CF 100 (600) x CF63 (450)	CF100RF63	304 S.S.	5.97	151.6	0.79	20.0	2.50	63.5	3.63	92.1	5.13	130.3	0.331 x 16	8.4 x 16	5/16-24 x 8
CF 150 (800) x CF35 (275)	CF150RF35	304 S.S.	7.97	202.5	0.87	22.0	1.50	38.1	2.31	58.7	7.13	181.0	0.331 x 20	8.4 x 20	1/4-28 x 6
CF 150 (800) x CF63 (450)	CF150RF63	304 S.S.	7.97	202.5	0.87	22.0	2.50	63.5	3.63	92.1	7.13	181.0	0.331 x 20	8.4 x 20	5/16-24 x 8
CF 150 (800) x CF100 (600)	CF150RF100	304 S.S.	7.97	202.5	0.87	22.0	4.00	101.6	5.13	130.3	7.13	181.0	0.331 x 20	8.4 x 20	5/16-24 x 16
CF 200 (1000) x CF35 (275)	CF200RF35	304 S.S.	9.97	253.2	0.97	24.70	1.50	38.1	2.31	58.7	9.13	231.8	0.331 x 24	8.4 x 24	1/4-28 x 6
CF 200 (1000) x CF63 (450)	CF200RF63	304 S.S.	9.97	253.2	0.97	24.70	2.50	63.5	3.63	92.1	9.13	231.8	0.331 x 24	8.4 x 24	5/16-24 x 8
CF 200 (1000) x CF100 (600	CF200RF100	304 S.S.	9.97	253.2	0.97	24.70	4.00	101.6	5.13	130.3	9.13	231.8	0.331 x 24	8.4 x 24	5/16-24 x 16
CF 200 (1000) x CF150 (800	CF200RF150	304 S.S.	9.97	253.2	0.97	24.70	6.00	152.4	7.13	181.0	9.13	231.8	0.331 x 24	8.4 x 24	5/16-24 x 20
CF 250 (1325) x CF35 (275)	CF250RF35	304 S.S.	13.25	336.5	1.12	28.50	1.50	38.1	2.31	58.7	12.07	306.5	0.406 x 30	10.3 x 30	1/4-28 x 6
CF 250 (1325) x CF63 (450)	CF250RF63	304 S.S.	13.25	336.5	1.12	28.50	2.50	63.5	3.63	92.1	12.07	306.5	0.406 x 30	10.3 x 30	5/16-24 x 8
CF 250 (1325) x CF100 (600	CF250RF100	304 S.S.	13.25	336.5	1.12	28.50	4.00	101.6	5.13	130.3	12.07	306.5	0.406 x 30	10.3 x 30	5/16-24 x 16
CF 250 (1325) x CF150 (800	CF250RF150	304 S.S.	13.25	336.5	1.12	28.50	6.00	152.4	7.13	181.0	12.07	306.5	0.406 x 30	10.3 x 30	5/16-24 x 20
CF 250 (1325) x CF200	CF250RF200	304 S.S.	13.25	336.5	1.12	28.50	8.00	203.2	9.13	231.8	12.07	306.5	0.406 x 30	10.3 x 30	5/16-24 x 24

SHAMEEM VACUUM

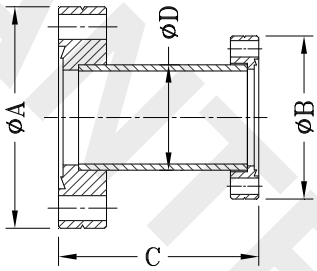

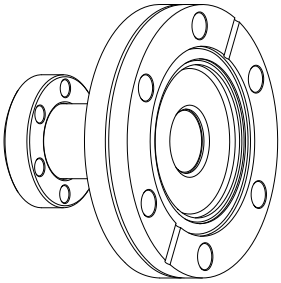

CF Reducing Adaptor-Fixed

Size	Model No.	Material	A		B		C		D	
			in	mm	in	mm	in	mm	in	mm
CF35 (275) x CF16 (133)	CF35RA16	304 S.S.	2.74	69.5	1.33	33.8	3.00	76.2	0.75	19.05
CF63 (450) x CF16 (133)	CF63RA16	304 S.S.	4.47	113.6	1.33	33.8	3.00	76.2	0.75	19.05
CF63 (450) x CF35 (275)	CF63RA35	304 S.S.	4.47	113.6	2.74	69.5	3.00	76.2	1.50	38.10
CF100 (600) x CF35 (275)	CF100RA35	304 S.S.	5.97	151.6	2.74	69.5	3.00	76.2	1.50	38.10
CF100 (600) x CF63 (450)	CF100RA63	304 S.S.	5.97	151.6	4.47	113.6	3.00	76.2	2.50	63.50
CF150 (800) x CF35 (275)	CF150RA35	304 S.S.	7.97	202.5	2.74	69.5	3.00	76.2	1.50	38.10
CF150 (800) x CF63 (450)	CF150RA63	304 S.S.	7.97	202.5	4.47	113.6	3.00	76.2	2.50	63.50
CF150 (800) x CF100 (600)	CF150RA100	304 S.S.	7.97	202.5	5.97	151.6	3.00	76.2	4.00	101.60

SHANTENG VACUUM

旋转式

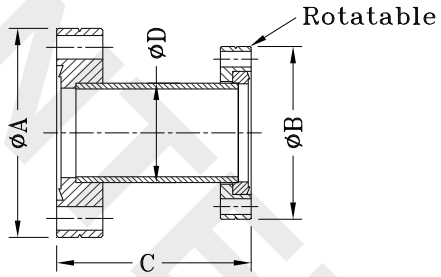

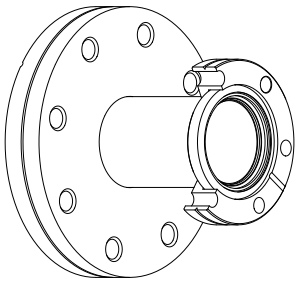

CF Reducing Adaptor-Small Flange Rotatable

Size	Model No.	Material	A		B		C		D	
			in	mm	in	mm	in	mm	in	mm
CF35 (275) x CF16 (133)	CF35RA16R	304 S.S.	2.74	69.5	1.33	33.8	3.00	76.2	0.75	19.05
CF63 (450) x CF16 (133)	CF63RA16R	304 S.S.	4.47	113.6	1.33	33.8	3.00	76.2	0.75	19.05
CF63 (450) x CF35 (275)	CF63RA35R	304 S.S.	4.47	113.6	2.74	69.5	3.00	76.2	1.50	38.10
CF100 (600) x CF35 (275)	CF100RA35R	304 S.S.	5.97	151.6	2.74	69.5	3.00	76.2	1.50	38.10
CF100 (600) x CF63 (450)	CF100RA63R	304 S.S.	5.97	151.6	4.47	113.6	3.00	76.2	2.50	63.50
CF150 (800) x CF35 (275)	CF150RA35R	304 S.S.	7.97	202.5	2.74	69.5	3.00	76.2	1.50	38.10
CF150 (800) x CF63 (450)	CF150RA63R	304 S.S.	7.97	202.5	4.47	113.6	3.00	76.2	2.50	63.50
CF150 (800) x CF100	CF150RA100R	304 S.S.	7.97	202.5	5.97	151.6	3.00	76.2	4.00	101.60

SHANTENG VACUUM

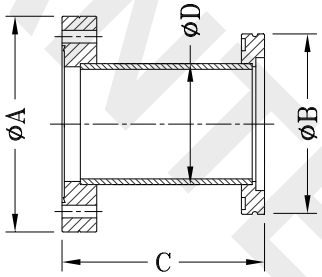

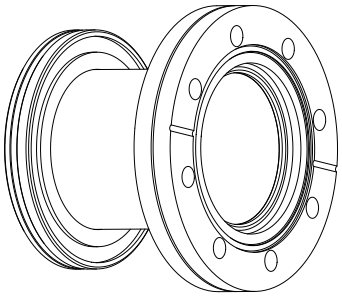

CF-ISO Tubulated Adaptor

Size	Model No.	Material	A		B		C		D	
			in	mm	in	mm	in	mm	in	mm
CF63 (450) x ISO63	CF63S63A	304 S.S.	4.47	113.6	3.74	95	3.54	90	2.50	63.5
CF100 (600) x ISO63	CF100S63A	304 S.S.	5.97	151.6	3.74	95	3.54	90	2.50	63.5
CF100 (600) x ISO100	CF100S100A	304 S.S.	5.97	151.6	5.12	130	3.54	90	4.00	101.6
CF100 (600) x ISO160	ISO160C100A	304 S.S.	5.97	151.6	7.09	180	3.54	90	4.00	101.6
CF150 (800) x ISO63	CF150S63A	304 S.S.	7.97	202.5	3.74	95	3.54	90	2.50	63.5
CF150 (800) x ISO100	CF150S100A	304 S.S.	7.97	202.5	5.12	130	3.54	90	4.00	101.6
CF150 (800) x ISO160	ISO160C150A	304 S.S.	7.97	202.5	7.09	180	3.54	90	6.00	152.4

SHANTENG VACUUM

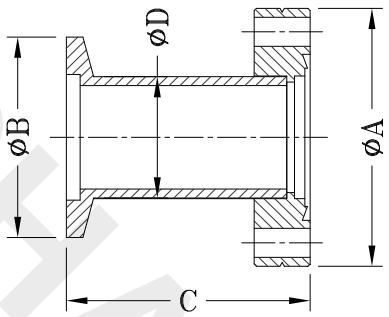

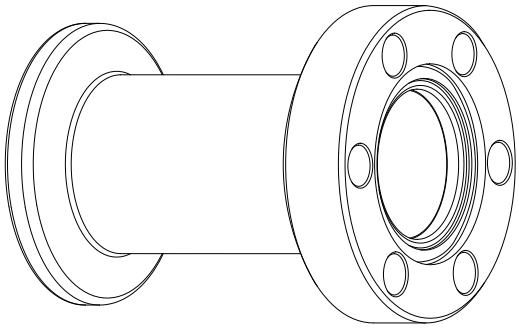

CF-KF Tubulated Adaptor

Size	Model No.	Material	A		B		C		D	
			in	mm	in	mm	in	mm	in	mm
CF16 x NW10	CF16K10A	304 S.S.	1.33	33.8	1.18	30	1.69	43.0	0.50	12.70
CF16 x NW16	CF16K16A	304 S.S.	1.33	33.8	1.18	30	1.69	43.0	0.75	19.05
CF35 x NW10	CF35K10A	304 S.S.	2.74	69.5	1.18	30	1.78	45.3	0.50	12.70
CF35 x NW16	CF35K16A	304 S.S.	2.74	69.5	1.18	30	1.78	45.3	0.75	19.05
CF35 x NW25	CF35K25A	304 S.S.	2.74	69.5	1.57	40	1.78	45.3	1.00	25.40
CF35 x NW40	CF35K40A	304 S.S.	2.74	69.5	2.17	55	1.78	45.3	1.50	38.10
CF63 x NW50	CF63K50A	304 S.S.	4.47	113.6	2.95	75	1.95	49.5	2.00	50.80

SHANTENG VACUUM

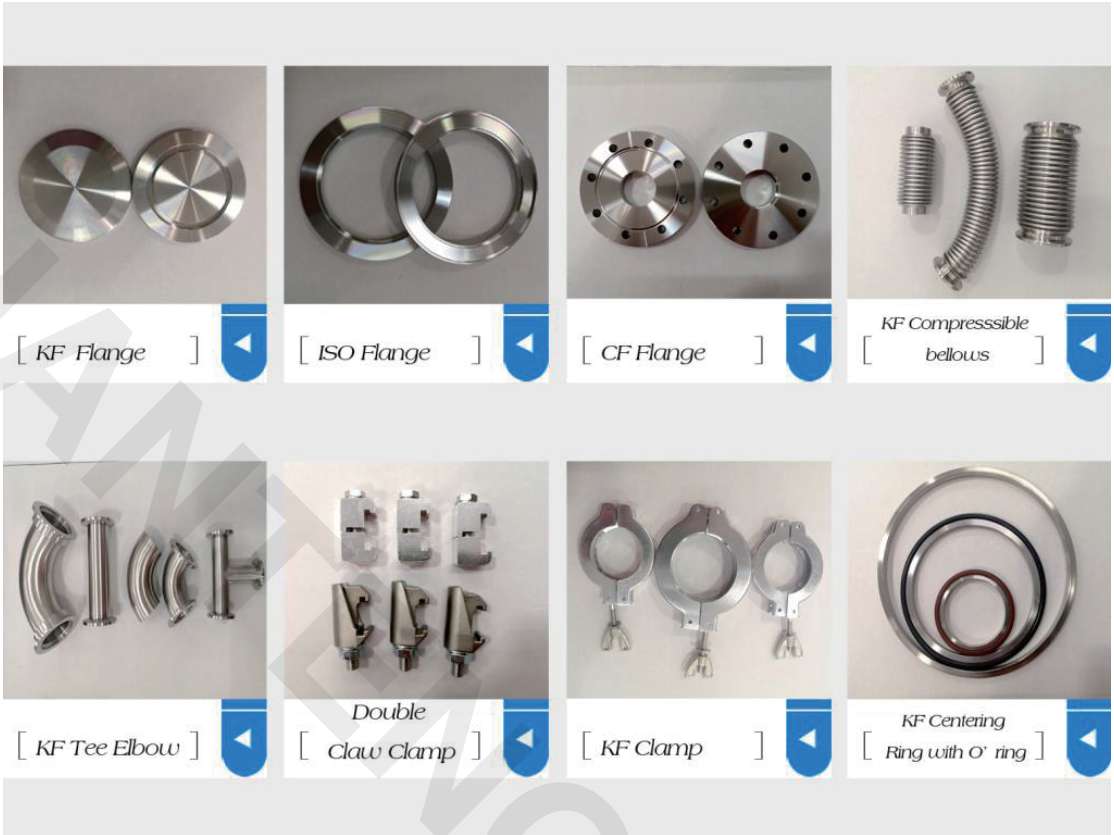

Contact

Alice Lv

Export Manager

SHANTENG VACUUM TECHNOLOGY CO.,LTD

ADD:No.688 Jiaqian Road,Nanxiang Town, Jiading District,Shanghai China 201802

Mobile:0086-13853165922

Email:894485097@qq.com

We chat:894485097

SHANTENG VACUUM